Summary in Graph

Exam Summary (GO Classes CS Test Series 2026 | MOCK GATE | Test 5)

Qs. Attempted:	0 (0 + 0)	Correct Marks:	0 (0 + 0)
Correct Attempts:	0 (0 + 0)	Penalty Marks:	0 (0 + 0)
Incorrect Attempts:	0 (0 + 0)	Resultant Marks:	0 (0 + 0)

Total Questions:	65 (30 + 35)
Total Marks:	100 (30 + 70)
Exam Duration:	180 Minutes
Time Taken:	0 Minutes

Individual Question Statistics

Select Metric: Marks Obtained

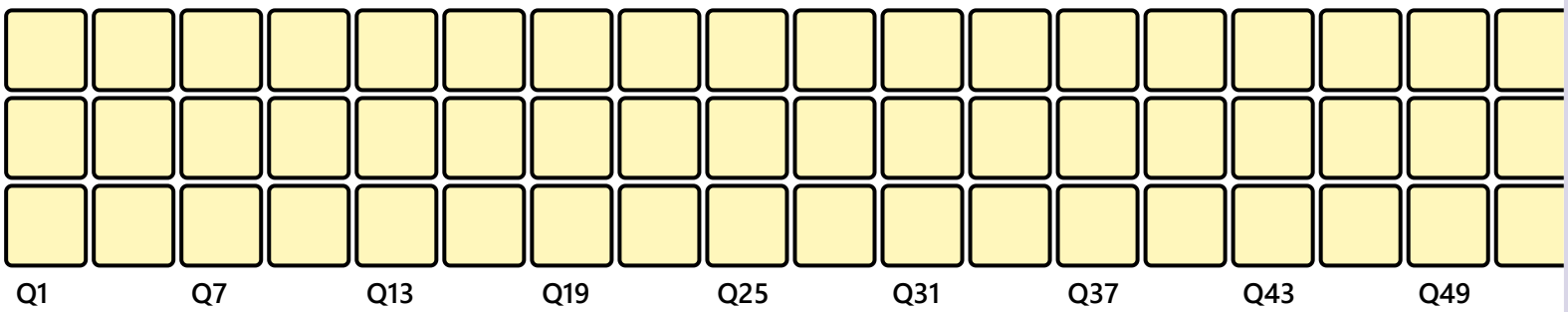

* Average Stats based on first-attempt stats of Top 10% (136) out of 1358 users

EXAM RESPONSE EXAM STATS FEEDBACK

Aptitude

Q #1 Multiple Choice Type Award: 1 Penalty: 0.33 Analytical Aptitude

Quantity A: The least prime number greater than 24
Quantity B: The greatest prime number less than 28

Which of the following is CORRECT?

A. Quantity A is greater.

B. Quantity B is greater.
C. The two quantities are equal.
D. The relationship cannot be determined from the information given.

Your Answer: | Correct Answer: A | Not Attempted | Time taken: 00min 00sec | Discuss

Q #2 Multiple Choice Type | Award: 1 | Penalty: 0.33 | Quantitative Aptitude

Which one of the following could be an integer?

A. The average of two consecutive integers
B. The average of three consecutive integers
C. The average of four consecutive integers
D. The average of six consecutive integers

Your Answer: | Correct Answer: B | Not Attempted | Time taken: 00min 00sec | Discuss

Q #3 Multiple Choice Type | Award: 1 | Penalty: 0.33 | Spatial Aptitude

What will be the mirror image of the number 2023 if the mirror is placed as shown in the figure -

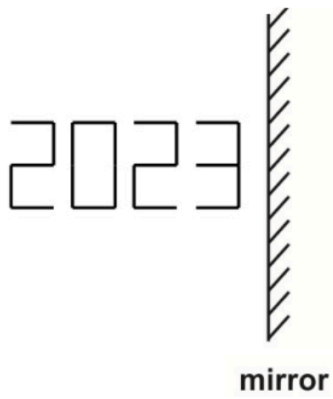

A.
B.
C.
D.

Your Answer: | Correct Answer: C | Not Attempted | Time taken: 00min 00sec | Discuss

Q #4 Multiple Choice Type | Award: 1 | Penalty: 0.33 | Verbal Aptitude

Could you please tell me where _____?

A. the office is located.
B. is located the office.
C. is the office located.
D. the office locate.

Your Answer: | Correct Answer: A | Not Attempted | Time taken: 00min 00sec | Discuss

Q #5 | Multiple Choice Type | Award: 1 | Penalty: 0.33 | Quantitative Aptitude

$S(n)$ is a statement about positive integers n such that whenever $S(k)$ is true, $S(k+1)$ must also be true. Furthermore, there exists some positive integer n_0 such that $S(n_0)$ is not true. Of the following, which is the strongest conclusion that can be drawn?

A. $S(n_0+1)$ is not true.
B. $S(n_0-1)$ is not true.
C. $S(n)$ is not true for any $n \leqq n_0$.
D. $S(n)$ is not true for any n.

Your Answer: | Correct Answer: C | Not Attempted | Time taken: 00min 00sec | Discuss

Q #6 | Multiple Choice Type | Award: 2 | Penalty: 0.67 | Quantitative Aptitude

If x and y are integers, and $w = x^2y + x + 3y$, which of the following statements must be true?

I. If w is even, then x must be even.
II. If x is odd, then w must be odd.
III. If y is odd, then w must be odd.

A. II only
B. I and II only
C. I and III only
D. I, II and III

Your Answer: | Correct Answer: D | Not Attempted | Time taken: 00min 00sec | Discuss

Q #7 | Multiple Choice Type | Award: 2 | Penalty: 0.67 | Quantitative Aptitude

Consider the following sequence of instructions.

1. Set $k = 999, i = 1$, and $p = 0$.
2. If $k > i$, then go to step 3; otherwise go to step 5.
3. Replace i with $2i$ and replace p with $p + 1$.
4. Go to step 2.
5. Print p.

If these instructions are followed, what number will be printed at step 5?

A. 2
B. 10
C. 512
D. 999

Your Answer: | Correct Answer: B | Not Attempted | Time taken: 00min 00sec | Discuss

Q #8 | Multiple Choice Type | Award: 2 | Penalty: 0.67 | Quantitative Aptitude

Let $\{a_n\}_{n=1}^{\infty}$ be defined recursively by $a_1 = 1$ and $a_{n+1} = \left(\frac{n+2}{n}\right) a_n$ for $n \geq 1$. Then a_{30} is equal to

A. $(15)(31)$
B. $(30)(31)$
C. $\frac{31}{29}$
D. $\frac{32!}{30!2!}$

Your Answer: | Correct Answer: A | Not Attempted | Time taken: 00min 12sec | Discuss

Q #9 | Multiple Choice Type | Award: 2 | Penalty: 0.67 | Quantitative Aptitude

Let P_1 be the set of all primes, $\{2, 3, 5, 7, \ldots\}$, and for each integer n, let P_n be the set of all prime multiples of n, $\{2n, 3n, 5n, 7n, \ldots\}$. Which of the following intersections is nonempty?

A. $\mathrm{P}_1 \cap \mathrm{P}_{23}$
B. $\mathrm{P}_7 \cap \mathrm{P}_{21}$
C. $\mathrm{P}_{12} \cap \mathrm{P}_{20}$
D. $\mathrm{P}_{20} \cap \mathrm{P}_{24}$

Your Answer: | Correct Answer: C | Not Attempted | Time taken: 00min 00sec | Discuss

Q #10 | Multiple Choice Type | Award: 2 | Penalty: 0.67 | Verbal Aptitude

Two statements are given:

i. Only rich people are likely to be bad-tempered.
ii. Only bad-tempered people are likely to wear glasses.

If the two statements are taken together, which of the following conclusions necessarily follows?

A. All people who wear glasses are rich.
B. There are no rich people who wear glasses.
C. There are no bad-tempered people who are rich.
D. All rich people are bad-tempered.

Your Answer: | Correct Answer: A | Not Attempted | Time taken: 00min 00sec | Discuss

Technical

Q #1 | Multiple Choice Type | Award: 1 | Penalty: 0.33 | Programming in C

The default storage class for global variables in the C language is –

A. Static
B. Auto
C. Extern
D. None of these

Your Answer: | Correct Answer: D | Not Attempted | Time taken: 00min 00sec | Discuss

Q #2 | Multiple Select Type | Award: 1 | Penalty: 0 | Programming in C

Consider the given struct node.

```
struct node {
int data;
struct node* next;
} n1, n2;
```

Which of the following statements are syntactically VALID (i.e. gets compiled without any error)?

A. `n1.next = &n2;`

B. `n2 → data = 351;`

C. `n1.next.data = 333;`

D. `(&n2) → next → next.data = 451;`

Your Answer: | Correct Answer: A | Not Attempted | Time taken: 00min 00sec | Discuss

Q #3 | Multiple Choice Type | Award: 1 | Penalty: 0.33 | Calculus

Evaluate the given limit:

$$\lim_{x \to 1} \frac{1}{x^2 - 1}$$

A. 1
B. -1
C. 0
D. Does not exist

Your Answer: | Correct Answer: D | Not Attempted | Time taken: 00min 00sec | Discuss

Q #4 | Multiple Choice Type | Award: 1 | Penalty: 0.33 | Compiler Design

In the $\mathrm{LR}(1)$ parsing process, if the parser is currently in a state involving the $\mathrm{LR}(1)$ item $\mathrm{A} \rightarrow ab.\, c, d,$ where $\mathrm{A} \rightarrow ab.\, c$ is the core item and d is the lookahead symbol, what element should be there on the top of the stack at this instance of parsing?

A. a
B. b
C. c
D. d

Your Answer: | Correct Answer: B | Not Attempted | Time taken: 00min 00sec | Discuss

Q #5 | Multiple Select Type | Award: 1 | Penalty: 0 | Linear Algebra

Let A be an $m \times n$-matrix. Consider the system of linear equations $Ax = b$, where x and b are the column vectors with dimension $n \times 1$ and $m \times 1$ respectively.
Which of the following statements are always true:

A. Suppose $m > n$ then the rank of the augmented matrix $(A \mid b)$ can not be larger than m.

B. Suppose A has full rank(i. e. $\text{rank}(A) = \min(m, n)$) then $Ax = b$ always has a solution.
C. If $Ax = b$ has a solution then $Ax = 0$ has a unique solution.
D. If $Ax = b$ has a unique solution then A has to be invertible

Your Answer: | Correct Answer: A | Not Attempted | Time taken: 00min 00sec | Discuss

Q #6 | Multiple Choice Type | Award: 1 | Penalty: 0.33 | Compiler Design

A lexical analyzer uses the following patterns to recognize three tokens T_1, T_2, and T_3 over the alphabet $\{a, b, c\}$.

$$\begin{aligned} &\mathrm{T}_1 : \mathrm{c} \\ &\mathrm{T}_2 : \mathrm{b} \\ &\mathrm{T}_3 : \mathrm{aa}^* \ \mathrm{b}^* \mathrm{c}^* \end{aligned}$$

If the string $babcaababcc$ is processed by the analyzer, which one of the following is the sequence of tokens it outputs? Note that the analyzer outputs the token that matches the longest possible prefix.

A. $\mathrm{T}_2\ \mathrm{T}_3\ \mathrm{T}_2\ \mathrm{T}_3$
B. $\mathrm{T}_2\ \mathrm{T}_3\ \mathrm{T}_1\ \mathrm{T}_3$
C. $\mathrm{T}_2\ \mathrm{T}_3\ \mathrm{T}_3\ \mathrm{T}_3$
D. $\mathrm{T}_2\ \mathrm{T}_3\ \mathrm{T}_3\ \mathrm{T}_3\ \mathrm{T}_1$

Your Answer: | Correct Answer: C | Not Attempted | Time taken: 00min 00sec | Discuss

Q #7 | Numerical Type | Award: 1 | Penalty: 0 | Operating System

Consider a system with a Page size $= 500$ bytes, ,assume that system uses single level page table, and the page table is given as follows as:

vpage #	frame #
0	3
1	11
2	33
3	14
4	12

The first column represents virtual page number and second column represents physical frame number. What is the physical address (in decimal) corresponding to the virtual address 999?

Your Answer: | Correct Answer: 5999 | Not Attempted | Time taken: 00min 00sec | Discuss

Q #8 | Multiple Select Type | Award: 1 | Penalty: 0 | Operating System

Consider that a safe sequence of processes is $\mathrm{p1}, \mathrm{p2}, \ldots, \mathrm{p10}$. The safe sequence is calculated based on the predeclared need, current allocation, and available resources.

Which of the following statements are CORRECT?

A. The safe sequence is also the execution sequence, meaning the processes strictly have to be executed in the same sequence as the safe sequence.
B. The Banker's algorithm will always allow process $\mathrm{p1}$ to be executed, regardless of the resources it requests, as long as it is under the predeclared need.
C. If we allow process $\mathrm{p2}$ to be executed before process $\mathrm{p1}$, then the system will always lead to a deadlock.

D. If we allow process $p2$ to be executed before process $p1$, then the system will always lead to an unsafe state.

Your Answer: | Correct Answer: B | Not Attempted | Time taken: 00min 00sec | Discuss

Q #9 | Multiple Choice Type | Award: 1 | Penalty: 0.33 | Computer Networks

Suppose that host A is connected to a router $R1$, and $R1$ is also connected to another host B. The link A-$R1$ drops the packet with a probability 0.1, and the link $R1$-B drops the packet with a probability 0.2. What is the probability that a packet sent by A does NOT reach to B?

A. 0.02
B. 0.72
C. 0.98
D. 0.28

Your Answer: | Correct Answer: D | Not Attempted | Time taken: 00min 00sec | Discuss

Q #10 | Numerical Type | Award: 1 | Penalty: 0 | Computer Networks

The sender needs to send a packet of 4800 bytes (which includes an IP header of 20 bytes) over a network path with 2 links A and B, with MTUs of $1500, 576$ bytes respectively.

How many packets will be received by the receiver?

Your Answer: | Correct Answer: 10 | Not Attempted | Time taken: 00min 00sec | Discuss

Q #11 | Multiple Choice Type | Award: 1 | Penalty: 0.33 | Data Structures

Suppose you have a priority queue implemented using a binary heap and you perform a series of n insert operations and n delete-min operations in such a way that the binary heap never contains more than $\sqrt{n}$ elements. The total running time of all $2n$ operations will be?

A. $O(\sqrt{n}\log n)$
B. $O(n\log n)$
C. $O(n\sqrt{\log n})$
D. $O(\sqrt{n\log n})$

Your Answer: | Correct Answer: B | Not Attempted | Time taken: 00min 00sec | Discuss

Q #12 | Multiple Select Type | Award: 1 | Penalty: 0 | Algorithms

Let $\mathrm{G} = (\mathrm{V}, \mathrm{E})$ be a weighted directed graph. The shortest path from a node $s \in \mathrm{V}$ to a node $t \in \mathrm{V}$ will remain unchanged if: (Multiple options may be correct).
In all options $w(v, u)$ represents the edge weight of the edge $v \rightarrow u$ for $u, v \in \mathrm{V}$.

A. Each edge weight $w(v, u)$ is replaced by $\mathrm{C} \cdot w(v, u)$ for a constant $\mathrm{C} > 0$.
B. Each edge weight $w(v, u)$ is replaced by $w(v, u) + \mathrm{C}$ for a constant $\mathrm{C} > 0$.
C. Each edge weight $w(v, u)$ is replaced by $w(v, u) - \mathrm{C}$ for a constant $\mathrm{C} > 0$.
D. Each edge weight $w(v, u)$ is replaced by $w(v, u)/\mathrm{C}$ for a constant $\mathrm{C} > 0$.

Your Answer: | Correct Answer: A;D | Not Attempted | Time taken: 00min 00sec | Discuss

Q #13

Multiple Select Type | Award: 1 | Penalty: 0 | Algorithms

Consider an array A which contains the elements $[23, 22, 16, 11, 15, 3, 4, 10]$. Suppose we perform different sorting algorithms and observe array elements in between of algorithms and found that elements are $[10, 22, 16, 11, 15, 3, 4, 23]$.

Which of the following algorithms we might have possibly applied on initial array elements to get the intermediate elements as shown?

A. Insertion sort
B. Merge Sort (usual top-down recursive)
C. Quick Sort
D. Heap Sort

Your Answer: | Correct Answer: C;D | Not Attempted | Time taken: 00min 00sec | Discuss

Q #14

Numerical Type | Award: 1 | Penalty: 0 | Combinatory

Chess is a game played on an 8×8 grid with a variety of pieces. In chess, no two king pieces can ever occupy two squares that are immediately adjacent to one another horizontally, vertically, or diagonally. For example, the following positions are illegal:

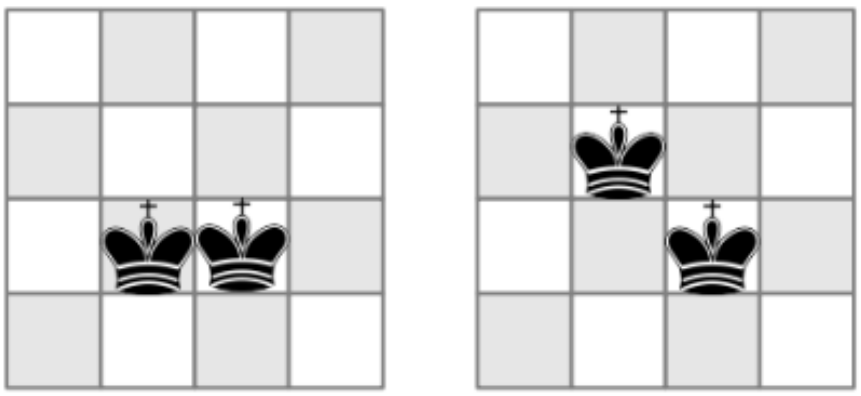

Maximum how many kings can we legally place onto a chessboard?

Your Answer: | Correct Answer: 16 | Not Attempted | Time taken: 00min 00sec | Discuss

Q #15

Multiple Select Type | Award: 1 | Penalty: 0 | Mathematical Logic

Let $\mathrm{f} : \mathrm{A} \rightarrow \mathrm{B}$ be a function from an arbitrary set A to an arbitrary set B. Below is a series of statements in first-order logic about the function f. Which statement is always true, regardless of which f we pick?

A. $\forall a \in \mathrm{A}. \exists b \in \mathrm{B}. f(a) = b.$
B. $\forall b \in \mathrm{B}. \exists a \in \mathrm{A}. f(a) = b.$

C. $\forall a_1 \in \mathrm{A}. \forall a_2 \in \mathrm{A}. (a_1 = a_2 \rightarrow f(a_1) = f(a_2))$
D. $\forall a_1 \in \mathrm{A}. \forall a_2 \in \mathrm{A}. (f(a_1) = f(a_2) \rightarrow a_1 = a_2)$

Your Answer: | Correct Answer: A;C | Not Attempted | Time taken: 00min 00sec | Discuss

Q #16 Multiple Select Type | Award: 1 | Penalty: 0 | Theory of Computation

Which of the following statements is/are true for languages over some alphabet Σ?

A. If L_1 and L_2 are context-free, then $\mathrm{L}_1\mathrm{L}_2$ is context-free.
B. If L_1 and L_2 are context-free, then $\mathrm{L}_1 \cup \mathrm{L}_2$ is context-free.
C. If L_1 and L_2 are context-free, then $\mathrm{L}_1 \cap \mathrm{L}_2$ is not context-free.
D. If L is context-free then the complement of L is not context-free.

Your Answer: | Correct Answer: A;B | Not Attempted | Time taken: 00min 00sec | Discuss

Q #17 Numerical Type | Award: 1 | Penalty: 0 | CO & Architecture

Consider a processor with a PC-relative branch instruction. Memory addresses are given as 32 bits. The branch instruction is at location A00F1AB0 (in hex). The branch's target address is A00F3B08. All instructions are 4 bytes. The displacement in the PC-relative branch instruction is given as a 16-bit signed integer in 2's complement. What is the displacement in the instruction(in decimal)?

Your Answer: | Correct Answer: 8276 | Not Attempted | Time taken: 00min 00sec | Discuss

Q #18 Multiple Choice Type | Award: 1 | Penalty: 0.33 | Digital Logic

The following circuit using a 3-to-8 binary decoder and an OR gate is an implementation of the function:

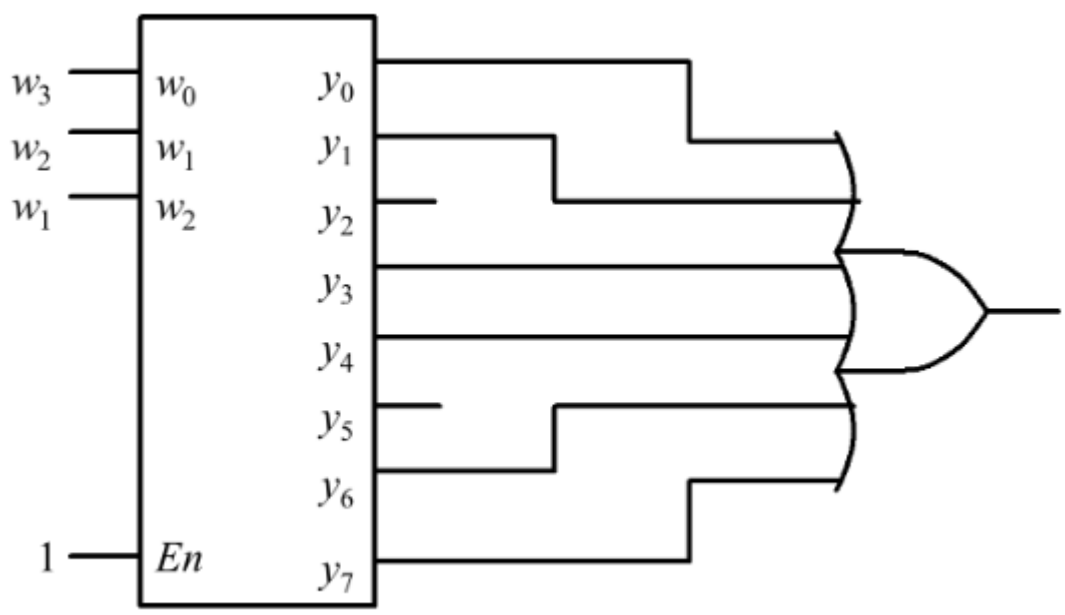

A. $f(w_1, w_2, w_3) = \sum_m (0, 1, 3, 4, 6, 7)$
B. $f(w_1, w_2, w_3) = \sum_m (1, 2, 4, 5, 7, 8)$
C. $f(w_1, w_2, w_3) = \prod_M (0, 1, 3, 4, 6, 7)$
D. $f(w_1, w_2, w_3) = \sum_m (2, 5)$

Your Answer: | Correct Answer: A | Not Attempted | Time taken: 00min 00sec | Discuss

Q #19 Numerical Type | Award: 1 | Penalty: 0 | Digital Logic

Suppose that N is a 5-bit 2's complement number and M is its 5-bit additive inverse (negative) in 2's complement. Note that N cannot be $10000(\text{i.e.} -16$ in decimal) because its additive inverse $(+16)$ cannot be represented using 5-bits in 2's complement. Also, assume that N is not 00000. If we reinterpret their bit patterns as 5-bit unsigned numbers, add them, and keep any carry out of the leftmost place, what number(unsigned) do we get (in decimal)?

Your Answer: | Correct Answer: 32 | Not Attempted | Time taken: 00min 00sec | Discuss

Q #20 Multiple Choice Type | Award: 1 | Penalty: 0.33 | Digital Logic

The resultant of the binary subtraction $1110101 - 0011110$ is _____.

A. 1001111
B. 1010111
C. 1010011
D. 1010001

Your Answer: | Correct Answer: B | Not Attempted | Time taken: 00min 00sec | Discuss

Q #21 Multiple Select Type | Award: 1 | Penalty: 0 | Databases

Consider the following relation $\mathrm{R}(\mathrm{A}, \mathrm{B}, \mathrm{C}, \mathrm{D}, \mathrm{E})$ and functional dependencies F that hold over this relation.

$$\begin{aligned} \mathrm{F} &= \mathrm{A}, \mathrm{B}, \mathrm{D} \rightarrow \mathrm{C} \\ &\mathrm{B}, \mathrm{C} \rightarrow \mathrm{D} \\ &\mathrm{C}, \mathrm{D} \rightarrow \mathrm{E} \end{aligned}$$

In which normal form is relation R? (Recall that a relation can be in multiple normal forms)

A. $1\mathrm{NF}$
B. $2\mathrm{NF}$
C. $3\mathrm{NF}$
D. BCNF

Your Answer: | Correct Answer: A | Not Attempted | Time taken: 00min 00sec | Discuss

Q #22 Multiple Select Type | Award: 1 | Penalty: 0 | Databases

Consider the following notation for operations of transactions:

- $w_1(A)$ transaction 1 wrote item A
- $r_1(A)$ transaction 1 read item A
- c_1 transaction 1 commits
- a_1 transaction 1 aborts

Consider the following schedules:

$$\begin{aligned} S_1 &= r_1(A), w_2(A), r_1(B), c_1, w_3(B), r_3(B), w_3(A), c_3, r_2(C), c_2 \\ S_2 &= r_1(A), w_2(B), r_1(B), c_1, c_2 \\ S_3 &= r_1(A), w_2(B), c_2, r_1(B), w_1(B), c_1 \\ S_4 &= w_1(A), w_2(A), c_2, w_1(A), c_1 \end{aligned}$$

Which of the following is/are false?

A. S_1 is conflict-serializable.
B. S_2 is recoverable.
C. S_3 is cascade-less.
D. S_4 is conflict-serializable.

Your Answer: | Correct Answer: B;D | Not Attempted | Time taken: 00min 00sec | Discuss

Q #23 | Numerical Type | Award: 1 | Penalty: 0 | Databases

Consider the following schedule S of transactions $T1, T2, T3, T4$:

T1	T2	T3	T4
	Reads(X)		
		Writes(X)	
		Commit	
Writes(X)			
Commit			
	Writes(Y)		
	Reads(Z)		
	Commit		
			Reads(X)
			Reads(Y)
			Commit

The number of directed edges in the Precedence Graph of the given schedule is _____.

Your Answer: | Correct Answer: 6 | Not Attempted | Time taken: 00min 00sec | Discuss

Q #24 | Multiple Choice Type | Award: 1 | Penalty: 0.33 | Databases

In relational algebra, the join operator ($\bowtie$) is logically redundant if we have additionally

A. intersection ($\cap$).
B. crossproduct ($\times$), select (σ), and project (π).
C. difference ($-$) and union ($\cup$).
D. crossproduct ($\times$) and difference ($-$).

Your Answer: | Correct Answer: B | Not Attempted | Time taken: 00min 00sec | Discuss

Q #25 | Numerical Type | Award: 1 | Penalty: 0 | Databases

SQL usually treats a table not as a set but rather as a multiset; duplicate tuples can appear more than once in a table and in the result of a query. SQL does not automatically eliminate duplicate tuples in the results of queries.

Consider two relations, each with one attribute : $R(A)$ and $S(C)$.

- The multiset of tuples of R is : $\{a, a, a, a, b, c\}$
- The multiset of tuples of S is : $\{a, a, a, a, b, c\}$

How many tuples will be there in the output of the following SQL query?

```
SELECT A
FROM R, S;
```

Your Answer: | Correct Answer: 36 | Not Attempted | Time taken: 00min 00sec | Discuss

Q #26 Multiple Select Type | Award: 2 | Penalty: 0 | Algorithms

Consider the problem of finding the largest, second-largest, and third-largest elements from a collection of 8 elements using comparisons. You may assume the elements are distinct. Which of the following statements are CORRECT?

A. All comparison-based algorithms require a minimum of $8 \log_2 8 = 24$ comparisons for the task.
B. There exists a comparison-based algorithm that accomplishes the task in 12 comparisons or fewer.
C. There exists a comparison-based algorithm that accomplishes the task in 8 comparisons or fewer.
D. No comparison-based algorithm can identify all three elements in fewer than 16 comparisons.

Your Answer: | Correct Answer: B | Not Attempted | Time taken: 00min 00sec | Discuss

Q #27 Multiple Choice Type | Award: 2 | Penalty: 0.67 | Algorithms

There are n 4-sided dice, each of a different color and numbered $1, 2, 3,$ and 4. Given an integer m, the goal is to determine the number of ways to roll the dices and achieve a sum of m. For instance, with $n = 2$ i.e. the number of dices being 2, there are two ways of getting the sum $m = 3$: the two dice can roll $(1, 2)$ or $(2, 1)$.

Let dice (n, m) represent the number of ways to roll n 4-sided dices to get a sum of m. As indicated below, base cases are already taken care.

$$\text{dice}(n, m) = \begin{cases} 0, & \text{if } n = 1 \text{ and } (m \leqslant 0 \vee m > 4) \\ 1, & \text{if } n = 1 \text{ and } 1 \leqslant m \leqslant 4 \\ _____ & \text{otherwise.} \end{cases}$$

Which of the following is the correct placeholder recursive case ?

A. $\text{dice}(n, m) = \text{dice}(n-1, m-1) + \text{dice}(n-1, m-2) + \text{dice}(n-1, m-3) + \text{dice}(n-1, m-4)$
B. $\text{dice}(n, m) = \text{dice}(n-1, m-1) + \text{dice}(n-2, m-1) + \text{dice}(n-3, m-1) + \text{dice}(n-4, m-1)$
C. $\text{dice}(n, m) = \text{dice}(n-1, m-1) + \text{dice}(n-1, m-2) + \text{dice}(n-1, m-3) + \text{dice}(n-1, m-4) +$
D. $\text{dice}(n, m) = \text{dice}(n-1, m-1) + 1$

Your Answer: | Correct Answer: A | Not Attempted | Time taken: 00min 00sec | Discuss

Q #28 Multiple Choice Type | Award: 2 | Penalty: 0.67 | Operating System

Suppose that there are 2 processes in a system that uses preemptive round-robin scheduling with a scheduling quantum of 5 milliseconds. The system has a single CPU. Both processes run a function which behaves as follows -

```
for i from 1 to 10 do
    compute for 2 milliseconds
    sleep for 3 milliseconds
end
```

At the end of for loop, a process is finished and it exits. During the “compute” part of each of its iterations, a process is runnable (running or ready to run). During the “sleep” part of each of its iterations, a process is blocked.

Suppose that both of the processes are created at time $t = 0$. At what time (in milliseconds) will both of the processes be finished?

A. 50
B. 51
C. 52
D. 53

Your Answer: | Correct Answer: C | Not Attempted | Time taken: 00min 00sec | Discuss

Q #29 | Multiple Select Type | Award: 2 | Penalty: 0 | Operating System

Consider a system with two preemptively scheduled threads. One thread executes the WriteA function shown below. The other executes the WriteB function, also shown below.

The random function called by WriteA returns a randomly generated non-negative $(0$ or greater than $0)$ integer. WriteA and WriteB are synchronized using two binary semaphores, S_a and S_b. The initial value of both semaphores is zero. Assume printf is atomic.

```
WriteA()
{
    unsigned int n, i;

    while (1)
    {
        n = random();

        for (i = 0; i < n; i++)
        {
            printf("A");
        }

        V(Sb);
        printf("C");
    }
}
```

```
WriteB()
{
    while (1)
    {
        P(Sb);
        printf("B");
        printf("D");
        V(Sa);
    }
}
```

Consider the following 10-character console output prefixes. (Each prefix shows the first 10 characters printed to the console.) Which of these prefixes could possibly be generated by the two threads running in this system?

A. $\mathrm{A\ B\ C\ D\ A\ B\ C\ D\ A\ B}$
B. $\mathrm{A\ B\ D\ B\ D\ B\ D\ B\ D\ A}$
C. $\mathrm{A\ B\ D\ B\ D\ B\ D\ B\ D\ C}$
D. $\mathrm{B\ C\ D\ B\ C\ D\ B\ C\ D\ A}$

Your Answer: | Correct Answer: A;D | Not Attempted | Time taken: 00min 00sec | Discuss

Q #30 | Numerical Type | Award: 2 | Penalty: 0 | Computer Networks

Imagine a world where IP addresses are $8(\text{not } 32)$ bits long. Suppose a router uses longest-prefix matching and has the following forwarding table -

Prefix Match	Interface
1	0
10	1
111	2
otherwise	3

What is the number of IP addresses reachable from interface 0?

Your Answer: | Correct Answer: 32 | Not Attempted | Time taken: 00min 00sec | Discuss

Q #31 | Multiple Choice Type | Award: 2 | Penalty: 0.67 | Computer Networks

Consider the TCP Congestion Avoidance (CA) phase. Let the current size of the congestion window be CWND bytes and the maximum segment size be MSS bytes.

How many bytes should the congestion window size be increased with each new ACK, assuming:

- An ACK is received for each segment
- Each segment carries exactly MSS bytes of data
- No packet loss occurs

A. For each new ACK in the CA phase, TCP increments the congestion window by $\frac{\mathrm{CWND}}{\mathrm{MSS}}$ bytes.

B. For each new ACK in the CA phase, TCP increments the congestion window by $\frac{\mathrm{MSS}}{\mathrm{CWND}}$ bytes.

C. For each new ACK in the CA phase, TCP increments the congestion window by MSS bytes.

D. For each new ACK in the CA phase, TCP increments the congestion window by $\frac{\mathrm{MSS} \times \mathrm{MSS}}{\mathrm{CWND}}$ bytes.

Your Answer: | Correct Answer: D | Not Attempted | Time taken: 00min 00sec | Discuss

Q #32 | Multiple Select Type | Award: 2 | Penalty: 0 | Compiler Design

Consider the given grammar below -

$$\mathrm{S} \rightarrow \mathrm{aa} \mid \mathrm{aSa}$$

Which of the following strings will NOT be recognized by the recursive decent parser with backtrack considering that the parser first try the rule $\mathrm{S} \rightarrow \mathrm{aa}$ and if it fails then it try the rule $\mathrm{S} \rightarrow a\mathrm{S}a$.

A. aa
B. $aaaa$
C. $aaaaaa$
D. $aaaaaaaa$

Your Answer: | Correct Answer: B;C;D | Not Attempted | Time taken: 00min 00sec | Discuss

Q #33 | Multiple Choice Type | Award: 2 | Penalty: 0.67 | Linear Algebra

As we say goodbye to 2023 and eagerly wait for 2024, our matrices A and B are throwing a big New Year's party. They're doing something special by calculating the expression $\mathrm{A}^{2024}\mathrm{B}^{2023}v$.

Let's meet the main characters:

Let $\mathbf{A} = \begin{bmatrix} 1 & 4 \\ 0 & 2 \end{bmatrix}, \mathbf{B} = \begin{bmatrix} 1 & -2 \\ 0 & 0.5 \end{bmatrix}, v = \begin{bmatrix} 4 \\ 1 \end{bmatrix}$

What is the resultant vector of $\mathrm{A}^{2024}\ \mathrm{B}^{2023}v$?

A. $\begin{bmatrix} 4 \\ 1 \end{bmatrix}$

B. $\begin{bmatrix} 8 \\ 1 \end{bmatrix}$

C. $\begin{bmatrix} 8 \\ 2 \end{bmatrix}$

D. $\begin{bmatrix} 4 \\ 2 \end{bmatrix}$

Your Answer: | Correct Answer: C | Not Attempted | Time taken: 00min 00sec | Discuss

Q #34

Numerical Type | Award: 2 | Penalty: 0 | Probability

Consider two Bernoulli random variables, X and Y, where each can take values 0 or 1.

$$P(X = 1) = 1/2$$
$$P(Y = 1 \mid X = 1) = 1$$
$$P(Y = 1) = 3/4$$

What is the probability $P(Y = 1 \mid X = 0)$?

Your Answer: | Correct Answer: 0.5 | Not Attempted | Time taken: 00min 00sec | Discuss

Q #35

Numerical Type | Award: 2 | Penalty: 0 | Programming in C

What should be the output of the following C program?

```c
#include <stdio.h>
int main(void) {
 int my_array[] = {1, 5, 10, 15};
 int *an_array[] = {&my_array[2], &my_array[0]};
 int *p = my_array;
 int **pp = &an_array[0];
 (*p)++;
 pp++;
 printf("%d", **pp);
}
```

Your Answer: | Correct Answer: 2 | Not Attempted | Time taken: 00min 00sec | Discuss

Q #36

Multiple Choice Type | Award: 2 | Penalty: 0.67 | Programming in C

Consider the given C program -

```c
#include <stdio.h>
#include <stdlib.h>

int mystery(int z, int* ans){
*ans = z;
return z/2;
}

int* g(int z) {
 int* ans = (int*)malloc(z*sizeof(int));
 int ok = mystery(z,ans);
 if(ok)
 return ans;
 else
 return g(z*2);
}

int main(){
 free(g(1));
}
```

Assume $\text{sizeof(int)} = 4$ bytes and malloc is always succesfull.

Which of the following is TRUE?

A. The program has a memory leak of 4 bytes
B. The program has a memory leak of 8 bytes
C. The program has a memory leak of 12 bytes
D. The program does not have a memory leak

Your Answer: | Correct Answer: A | Not Attempted | Time taken: 00min 00sec | Discuss

Q #37

Multiple Select Type | Award: 2 | Penalty: 0 | Algorithms

A function $f(n)$ is said to be polynomially larger than $g(n)$ if $f(n) = \Omega\left(g(n)n^{\varepsilon}\right)$ for some $\varepsilon > 0$. A function $\mathrm{f}(n)$ is said to be asymptotically larger than $g(n)$ if $f(n) = \Omega(\mathrm{g}(n))$.

Which of the followings are TRUE?

A. $f(n) = n^2$ is polynomially larger than $g(n) = n/\log n$.
B. $f(n) = 2^n$ is polynomially larger than $g(n) = n^2$.
C. $f(n) = 2^n$ is asymptotically larger than $g(n) = n^2$.
D. $f(n) = n$ is polynomially larger than $g(n) = \log n$.

Your Answer: | Correct Answer: A;B;C;D | Not Attempted | Time taken: 00min 00sec | Discuss

Q #38

Multiple Choice Type | Award: 2 | Penalty: 0.67 | Data Structures

What is the time complexity of the code given?

```c
for (i = n; i > 0; i--) {
    for (j = 1; j < n; j = j * 2) {
        for (k = 0; k < j; k++) {
            printf("GO Classes");
        }
    }
}
```

A. $\Theta(n)$
B. $\Theta\left(n^2\right)$

C. $\Theta\left(n^3\right)$
D. $\Theta\left(n^2 \log n\right)$

Your Answer: | Correct Answer: B | Not Attempted | Time taken: 00min 00sec | Discuss

Q #39 | Multiple Select Type | Award: 2 | Penalty: 0 | Algorithms

Which of the followings are CORRECT for Depth-First Search (DFS) on the graphs?
let n be greater than 2 in all options.

A. DFS on a directed graph with n vertices and n edges is guaranteed to find at least one back edge.
B. DFS on an undirected graph with n vertices and n edges is guaranteed to find at least one back edge.
C. DFS on an undirected graph with n vertices and n edges may find a cross edge.
D. DFS on a directed graph with n vertices and n edges may find one cross edge.

Your Answer: | Correct Answer: B;D | Not Attempted | Time taken: 00min 00sec | Discuss

Q #40 | Multiple Select Type | Award: 2 | Penalty: 0 | Set Theory & Algebra

Let A and B be arbitrary sets where $\leq_{\mathrm{B}}$ is a partial order over B. Suppose that we pick a function $f : \mathrm{A} \rightarrow \mathrm{B}$. We can then define a relation $\leq_{\mathrm{A}}$ over A as follows: for any $x, y \in \mathrm{A}$, we have $x \leq_{\mathrm{A}} y$ iff $f(x) \leq_{\mathrm{B}} f(y)$.

Which of the following statements is/are true?

A. $\leq_{\mathrm{A}}$ is a reflexive relation over A.

B. $\leq_{\mathrm{A}}$ is a symmetric relation over A.

C. $\leq_{\mathrm{A}}$ is an anti-symmetric relation over A.

D. $\leq_{\mathrm{A}}$ is a transitive relation over A.

Your Answer: | Correct Answer: A;D | Not Attempted | Time taken: 00min 00sec | Discuss

Q #41 | Multiple Select Type | Award: 2 | Penalty: 0 | Mathematical Logic

In what follows, let's assume the domain of discourse is a nonempty set of people, so all quantifiers range over people.
Consider the predicate $\mathrm{Drinks}(\mathrm{p})$, which says that p is currently drinking. The drinker's paradox is the following statement:

$$\exists \mathrm{p}.\ (\mathrm{Drinks}(\mathrm{p}) \rightarrow \forall \mathrm{q}.\ \mathrm{Drinks}(\mathrm{q}))$$

This says "there is someone such that if that person is drinking, then everyone is drinking."

Which of the following is/are true?

A. The above statement is always true, regardless of who's drinking.
B. The above statement can be false depending on who's drinking.
C. The above statement is equivalent to the following statement: $(\exists \mathrm{p}.\ \mathrm{Drinks}(\mathrm{p})) \rightarrow (\forall \mathrm{q}.\ \mathrm{Drinks}(\mathrm{q}))$
D. The above statement is equivalent to the following statement: $(\forall \mathrm{p}.\ \mathrm{Drinks}(\mathrm{p})) \rightarrow (\forall \mathrm{q}.\ \mathrm{Drinks}(\mathrm{q}))$

Your Answer: | Correct Answer: A;D | Not Attempted | Time taken: 00min 00sec | Discuss

Q #42 Multiple Select Type | Award: 2 | Penalty: 0 | Graph Theory

A way to transform one undirected simple graph into another is by obtaining its subdivision. Intuitively, the subdivision of an undirected graph G, denoted $\mathrm{Sub}(\mathrm{G})$, is the graph formed by taking each edge in G, breaking the edge in half, and joining the two halves together by adding a node into the middle of the edge. For example, here's a graph G and its subdivision:

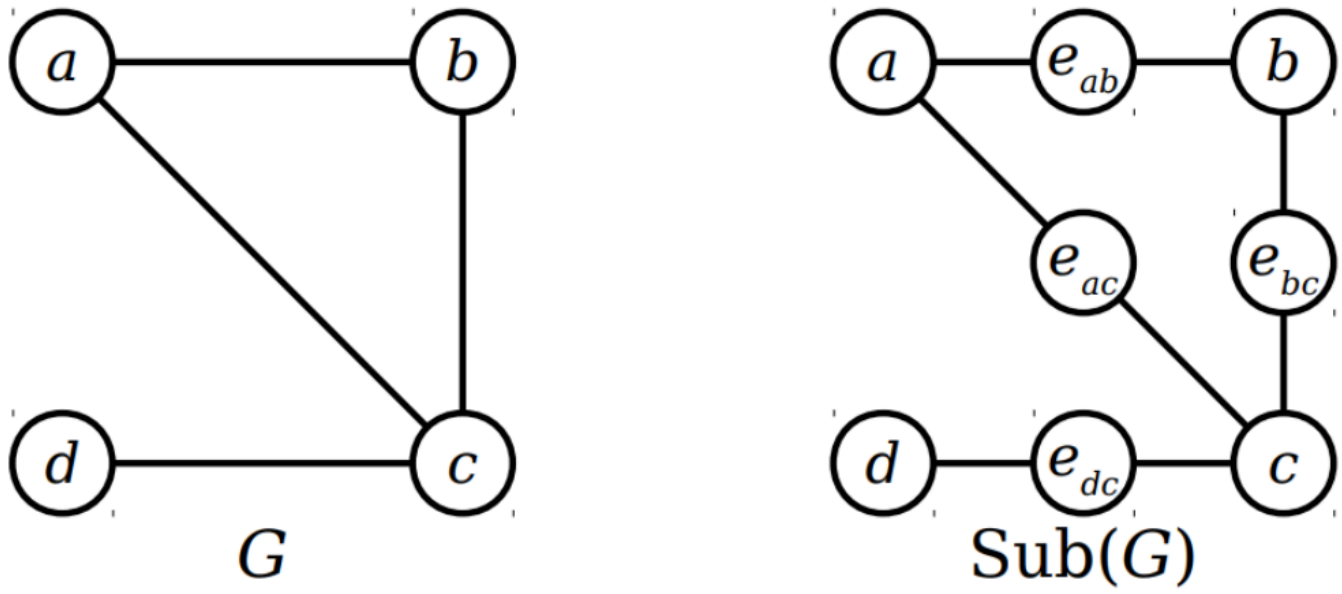

Formally speaking, given a graph G, we can form its subdivision $\mathrm{Sub}(G)$ as follows. For each edge $\{u, v\} \in \mathrm{E}$, create a new node e_{uv}. Then, replace each edge $\{u, v\}$ with two edges $\{u, e_{uv}\}$ and $\{e_{uv}, v\}$. This resulting graph is $\mathrm{Sub}(\mathrm{G})$. (Intuitively, the subdivision of G is formed by "splitting" each edge into two edges, with a new node inserted in the middle.)

Which of the following is/are true about the subdivision of an undirected simple graph?

A. For every undirected simple graph G, the $\mathrm{Sub}(\mathrm{G})$ is always bipartite.
B. If G is a planar graph, then $\mathrm{Sub}(\mathrm{G})$ is also planar.
C. If G contains an even length cycle then $\mathrm{Sub}(\mathrm{G})$ also contains an even length cycle.
D. If $\mathrm{Sub}(\mathrm{G})$ contains an even length cycle then G also contains an even length cycle.

Your Answer: | Correct Answer: A;B;C | Not Attempted | Time taken: 00min 00sec | Discuss

Q #43 Multiple Choice Type | Award: 2 | Penalty: 0.67 | Set Theory & Algebra

Suppose that two binary operations, denoted by $\oplus$ and $\odot$, are defined on a nonempty set S, and that the following conditions are satisfied for all x, y, and z in S :

1. $x \oplus y$ and $x \odot y$ are in S.
2. $x \oplus (y \oplus z) = (x \oplus y) \oplus z$ and $x \odot (y \odot z) = (x \odot y) \odot z$.
3. $x \oplus y = y \oplus x$

Also, for each x in S and for each positive integer n, the elements nx and x^n are defined recursively as follows:

- $1x = x^1 = x$ and
- if kx and x^k have been defined, then $(k+1)x = kx \oplus x$ and $x^{k+1} = x^k \odot x$.

Which of the following must be true?

I. $(x \odot y)^n = x^n \odot y^n$ for all x and y in S and for each positive integer n.
II. $n(x \oplus y) = nx \oplus ny$ for all x and y in S and for each positive integer n.
III. $x^m \odot x^n = x^{m+n}$ for each x in S and for all positive integers m and n.

A. I only
B. III only
C. II and III only

D. I, II, and III

Your Answer: | Correct Answer: C | Not Attempted | Time taken: 00min 00sec | Discuss

Q #44 | Multiple Choice Type | Award: 2 | Penalty: 0.67 | Theory of Computation

Suppose that you have a collection of n Recursively Enumerable (RE) languages $\mathrm{L}_1, \mathrm{L}_2, \ldots, \mathrm{L}_n$ over the same alphabet Σ that have the following property: every string in Σ^* belongs to exactly one of $\mathrm{L}_1, \mathrm{L}_2, \ldots$, or L_n.

In other words, $\mathrm{L}_1 \cup \mathrm{L}_2 \cup \ldots \cup \mathrm{L}_n = \Sigma^*$, and every string in Σ^* belongs to exactly one of the languages L_k.

Which of the following is true for the above n RE languages?

A. Each of these languages must be undecidable.
B. Each of these languages must be decidable.
C. At least one of these languages must be undecidable.
D. Can't determine decidable/undecidable from the given information.

Your Answer: | Correct Answer: B | Not Attempted | Time taken: 00min 00sec | Discuss

Q #45 | Multiple Select Type | Award: 2 | Penalty: 0 | Theory of Computation

A language $\mathrm{L} \subseteq \Sigma^*$ is said to be co-finite if its complement $(\Sigma^* \backslash L)$ is a finite set.

Which of the following statements is/are true?

A. If L is co-finite then L is regular.
B. $\mathrm{L} = \{tu \mid t$ and u are strings over $\{a, b\}$ with the same number of $a's\}$ is regular.
C. Let $\mathrm{L} = \mathrm{L}_1 \cup \mathrm{L}_2$ where $\mathrm{L}_1 \cap \mathrm{L}_2 = \emptyset$. If L_1 is regular and L_2 is not regular, then L is not regular.
D. Let $\Sigma = \{a, b\}$ and $\mathrm{L} = \{a^n w a^n \mid n \geq 1, w \in \Sigma^*\}$. L is not regular but is context-free.

Your Answer: | Correct Answer: A;B;C | Not Attempted | Time taken: 00min 00sec | Discuss

Q #46 | Numerical Type | Award: 2 | Penalty: 0 | Theory of Computation

Let L be the language generated by the grammar $G = (V_N, V_T, S, P)$ where $V_N = \{S, A, B, C, X, Y, Z\}$, $V_T = \{a, b, c\}$, and $P = \{S \rightarrow \lambda|AX|BY|CZ, X \rightarrow \lambda|BY|CZ, Y \rightarrow \lambda|AX \mid CZ,$
$Z \rightarrow \lambda|AX|BY, A \rightarrow a, B \rightarrow b, C \rightarrow c\}$. How many strings of length 4 does L contain?

Your Answer: | Correct Answer: 24 | Not Attempted | Time taken: 00min 00sec | Discuss

Q #47 | Multiple Choice Type | Award: 2 | Penalty: 0.67 | Theory of Computation

What is the language recognized by the following PDA P?

The stack alphabet of P is $\{\mathrm{A}, \mathrm{B}, \perp\}$ where $\perp$ is the initial stack symbol. The alphabet of P is $\{a, b, \dashv\}$ where $\dashv$ is used to mark the end of the input. Here, $\#_c(x)$ stands for the number of c symbols in x.

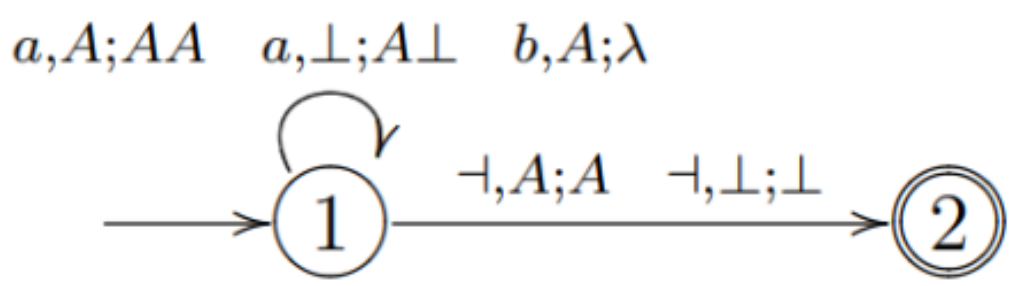

A. $\{a^n b^m \dashv | n \geq m\}$
B. $\{a^n b^m \dashv | m \geq n\}$
C. $\{x \in \{a,b\}^* \dashv | \#_a(w) \geq \#_b(w)$ for every prefix w of $x\}$
D. $\{x \in \{a,b\}^* \dashv | \#_a(w) > \#_b(w)$ for every prefix w of $x\}$

Your Answer: | Correct Answer: C | Not Attempted | Time taken: 00min 00sec | Discuss

Q #48

Numerical Type | Award: 2 | Penalty: 0 | CO & Architecture

Given an array A comprising 500 integers stored in main memory at an integer-aligned address (i.e., the base address of A is divisible by the size of an integer, which is 4 bytes). Assuming a main memory and cache block size of 256 bytes, if we perform access to $\mathrm{A}[0]$ and $\mathrm{A}[15]$ consecutively in the same order, how many positions within a given main memory block can we store the first element of the array to ensure a cache hit on $\mathrm{A}[15]$ immediately after a cache miss on $\mathrm{A}[0]$?

Your Answer: | Correct Answer: 49 | Not Attempted | Time taken: 00min 00sec | Discuss

Q #49

Numerical Type | Award: 2 | Penalty: 0 | CO & Architecture

The figure below shows a CPU with a 12-bit address bus, to which is attached three memory blocks — a ROM, a RAM, and an area devoted to I/O. The diagram shows the range of address lines entering each device, along with 5 address lines entering a special decoder which is used to select a unit. The decoder outputs are 1 when the given condition on $\mathrm{A}[11:7]$ is satisfied. For example, for the ROM "0000X" means that CS(ROM) $= 1$ when $\mathrm{A}11$ to $\mathrm{A}8$ are all zero, but $\mathrm{A}7$ is a "don't care" (i.e. the decoder doesn't care about $\mathrm{A}7$ because $\mathrm{A}7$ is used as an address line into the ROM).

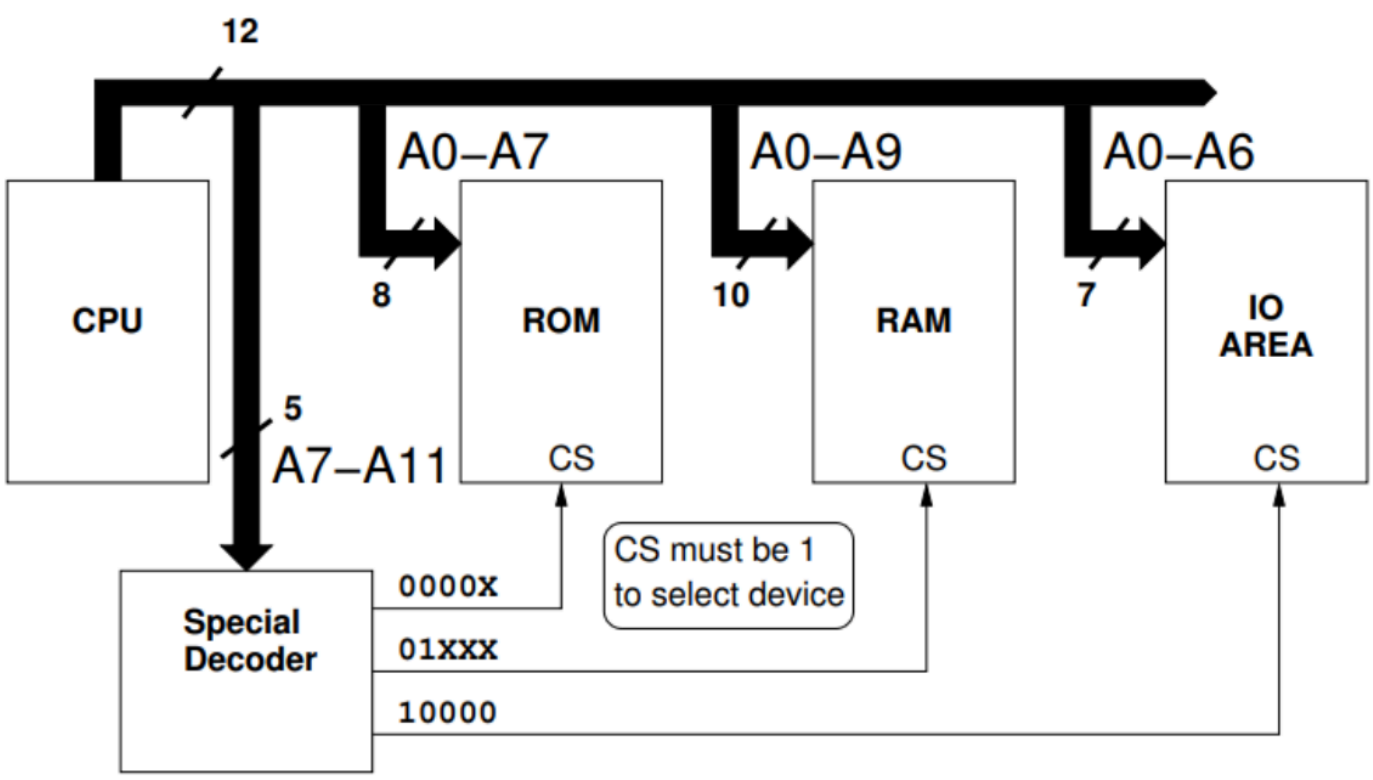

Deduce the maximum number of addressable locations in each memory device. Let the maximum number of addressable locations in ROM, RAM and IO be $2^a, 2^b$ and 2^c respectively. What is the value of $\mathrm{a} + 2b + 3c$?

Your Answer: | Correct Answer: 49 | Not Attempted | Time taken: 00min 00sec | Discuss

Q #50 Numerical Type | Award: 2 | Penalty: 0 | CO & Architecture

We design the instruction formats for the following instruction set using an expanding opcode. The size of all instructions is 32 bits, all register numbers are 4 bits, memory addresses are 20 bits, and the displacement field is 16 bits.

- N instructions with two register numbers and one memory address.
- 14 instructions with one register number and one memory address.
- 31 instructions with one register number and one displacement.
- 15 instructions with one displacement.

What is the maximum value of N?

Your Answer: | Correct Answer: 15 | Not Attempted | Time taken: 00min 00sec | Discuss

Q #51 Multiple Select Type | Award: 2 | Penalty: 0 | CO & Architecture

Which of the following statements is/are true regarding the pipelining in a processor?

A. Pipelining improves performance by decreasing the execution time of an individual instruction.
B. If the pipelining stages are perfectly balanced (i.e., all stages take the same time), and we have a large number of instructions with no stalls, then the speed-up from pipelining is approximately equal to the number of pipe stages.
C. The clock cycle (the length of a clock period) in pipelining is determined by the slowest possible stage (the stage with the largest latency).
D. Assuming no stalls and the same machine instruction set, a 4-stage pipeline with a cycle time of $125\ \mathrm{ps}$ will be faster than a 5-stage pipeline with a cycle time of $100\ \mathrm{ps}$.

Your Answer: | Correct Answer: B;C | Not Attempted | Time taken: 00min 00sec | Discuss

Q #52 Numerical Type | Award: 2 | Penalty: 0 | Operating System

Consider a scenario involving two concurrently executing threads on a single CPU machine.

Both threads follow identical pseudo-code, outlined as follows:

```
for i = 1 to 3  do
    total = total + 1
```

Assume that the variable 'total' is shared, initialized to 0, and 'i' is a local variable.

Determine the number of possible values for the variable 'total' upon completion of the threads' execution.

Your Answer: | Correct Answer: 5 | Not Attempted | Time taken: 00min 00sec | Discuss

Q #53 Multiple Select Type | Award: 2 | Penalty: 0 | Computer Networks

A simple network uses 6-bit network-layer addresses and consists of three subnets connected to a router. The router has three interfaces, labeled A, B, and C.

- All hosts with addresses ranging from 000000 to 001111 are connected to Interface A.

- All hosts with addresses ranging from 010000 to 011111 are connected to Interface B.
- All other hosts are connected to Interface C.

The router uses the longest prefix matching to forward packets. The forwarding table is represented as a sequence of tuples (x, Y), which means a packet with a destination address prefix of x will be forwarded via interface Y.

Which of the following is/are the correct forwarding table in this router?

A. $(0,\ \mathrm{A})(01,\ \mathrm{B})$(otherwise, C)
B. $(00,\ \mathrm{A})(0,\ \mathrm{B})$(otherwise, C)
C. $(000,\ \mathrm{A})(001,\ \mathrm{A})(1, \mathrm{C})$(otherwise, B)
D. $(00,\ \mathrm{A})(1, \mathrm{C})$(otherwise, B)

Your Answer: | Correct Answer: A;B;C;D | Not Attempted | Time taken: 00min 00sec | Discuss

Q #54

Multiple Choice Type | Award: 2 | Penalty: 0.67 | Digital Logic

For the following circuit, assume that all the logic gates have an equal value of non-zero propagation delay and that $\mathrm{X} = 0$ and $\mathrm{Y} = 0$.

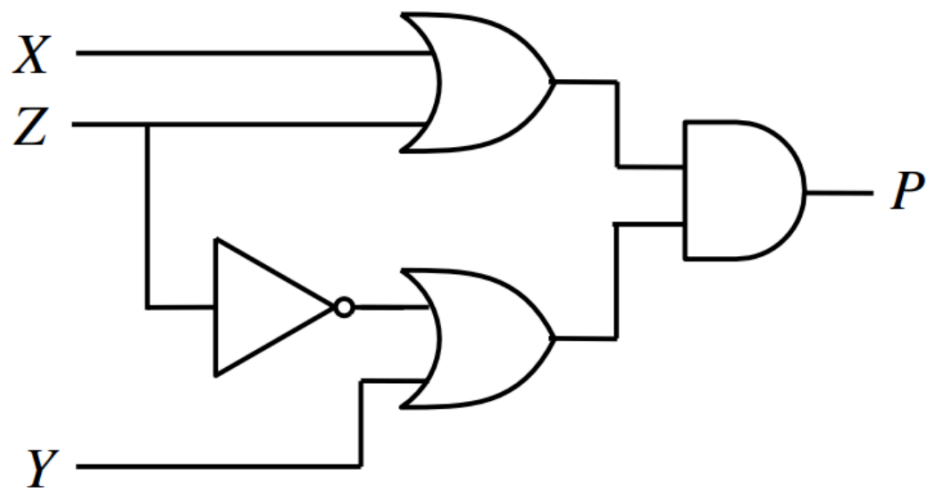

Which of the following is true about output P when input Z changes?

A. The output P momentarily changes from 1 to 0 when input Z changes from 1 to 0, even though the output P should have remained static(i.e. unchanged).
B. The output P momentarily changes from 0 to 1 when input Z changes from 1 to 0, even though the output P should have remained static(i.e. unchanged).
C. The output P momentarily changes from 0 to 1 when input Z changes from 0 to 1, even though the output P should have remained static(i.e. unchanged).
D. The output P momentarily changes from 1 to 0 when input Z changes from 0 to 1, even though the output P should have remained static(i.e. unchanged).

Your Answer: | Correct Answer: C | Not Attempted | Time taken: 00min 00sec | Discuss

Q #55

Numerical Type | Award: 2 | Penalty: 0 | Digital Logic

Neglecting the delays due to the logic gates in the circuit shown in the figure, the decimal equivalent of the binary sequence $[\mathrm{ABCD}]$ of initial logic states, which will not change with clock, is_____.

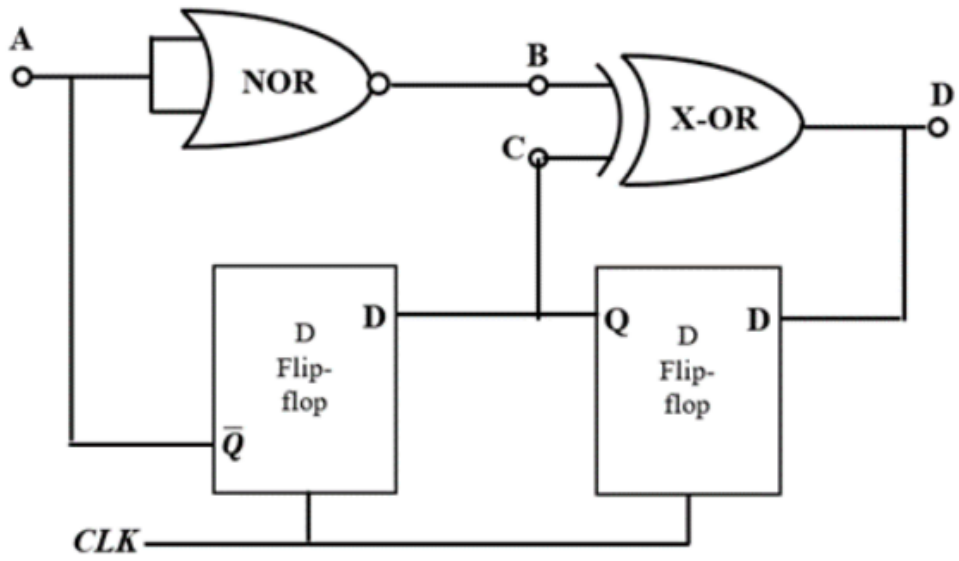

Your Answer: | Correct Answer: 8 | Not Attempted | Time taken: 00min 00sec | Discuss

Copyright & Stuff